FORCE & TORQUE MEASUREMENT
ISO 9001 & ISO/IEC 17025 ACCREDITED

IMADA, Inc.®
3100 Dundee Rd., Suite 707, Northbrook, IL 60062
Tel: 847-562-0834 Fax: 847-562-0839
www.imada.com E-mail: imada@imada.com

Digital Torque Gauge
Model: HTGS

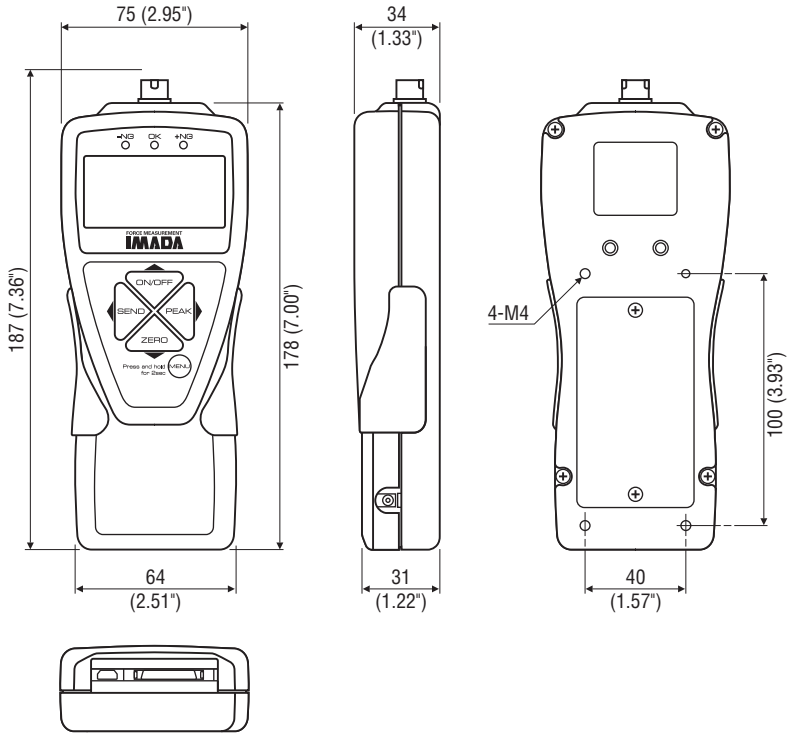

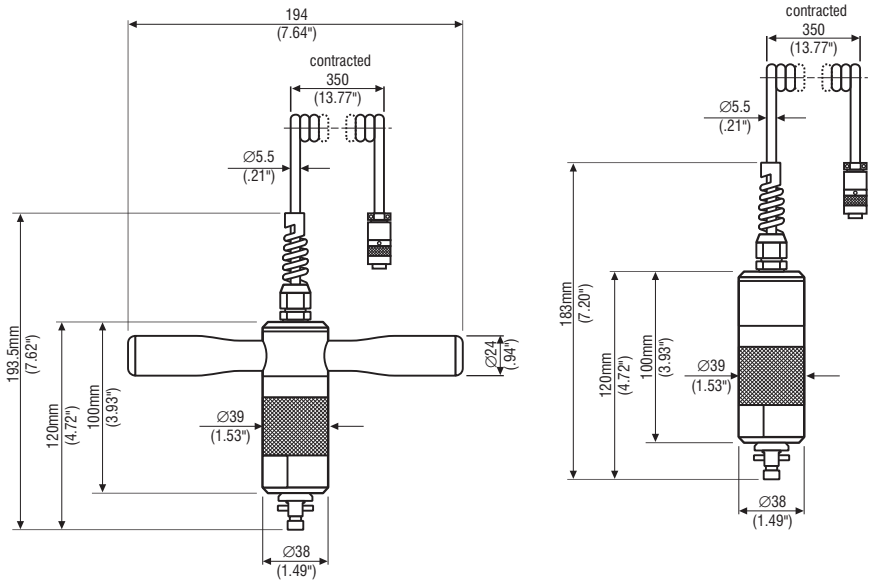

Sensor 10N